Chapter 2

Design and Analysis of Ascent Assist Control in Automobile Vehicles

Ashok Kumar R*, S. Ramasubramanian, L. Karikalan, S.Baskar

School of Engineering, Department of Automobile Engineering, Vels Institute of Science, Technology and Advanced Studies, Chennai 600 117, Tamil Nadu, India.

**Corresponding author mail id: ashok.ley@gmail.com*

Abstract:

The novelty relates to a automobile vehicle hold at Hill ascent and descent. Normally vehicle will not have a problem to move forward after stopping or static position in the flat road. The vehicle moving forward or reverse from stopped condition on upwardly slanted roadway and against slope, a driver faces various difficulties. Some luxury vehicles have that Hill Hold control features with the help of various hydraulic modules, electrical modules, electronic modules etc... However, those vehicles will impact to customer in terms of cost. To drive the vehicle, the driver has to use his right leg to operate both brake and accelerator pedals simultaneously, but due to slope and time lag between the brake release and the required torque generation, vehicle starts rolling back before moving ahead and it will result in hitting the pillion vehicle or objects and meet accident with the other vehicles. A control method for a hill start assistant control system may include determining that the vehicle is stopped and braked; receiving a current sensing value from an acceleration sensor on the vehicle which senses acceleration and periodically outputs a sensing value with the vehicle stopped and braked; determining whether a condition for stabilizing an output of the acceleration sensor is satisfied, using the current sensing value and a

ISBN 978-819704201-0

previous sensing value; finding an acceleration accumulation average by accumulating the current sensing value and averaging sensing values of the acceleration sensor which are accumulated up to a current time when the condition for stabilizing the output of the acceleration sensor is not satisfied; comparing the acceleration accumulation average with an accumulation reference value; and operating the hill start assistant control system, when the acceleration accumulation average is larger than the acceleration reference value.

To solve the problem of easy slipping on hill during the starting process of electric vehicle, the hill starting control strategy was established on the basis of hill-start assist system. The problem of function trigger and the Hill Starting Aid valve control in the hill-start assist system had been solved by the slope recognition and starting resistance calculation. The simulation results show that the designed observer could recognize the road slope effectively and the system could meet the requirements of safety and driving comfort in hill starting process.

1. Introduction

To avoid over-run, hill assist device is used. In this device brake actuation and clutch actuation takes place at same time and it is achieved by operating a single pedal. If the brake has been applied on a gradient, and the vehicle stopped, even the clutch pedal needs to be operated, to prevent the engine from stopping along with the vehicle, before restarting on the gradient, the solenoid is switched on. Air now flows to the DCV. The driver is then free to release the foot brakes, since the air from the solenoid at the DCV will not allow the QRV to release the air from brake chambers. The operator's foot, having released the brake pedal, now goes to accelerator pedal. The driver then shifts into first gear, accelerated and release the clutch pedal. Air from clutch is released, engaging the clutch and simultaneously air from the brake chamber is released through the QRV releasing the brakes and the vehicle moves forward smoothly. The

solenoid must be switched off after movement of the vehicle, before the clutch pedal is operated to shift into next gear.

On hilly terrains while stopping and restarting the vehicle the driver needs to use his both foots for clutch and brake and for pressing the accelerator pedal he needs to take extra and very hard effort, this leads to:

- Slipping of clutch
- Wheel slipping
- Violent jerk leads to propeller shaft damage

A manual transmission for use in an automotive vehicle is generally connected to the engine through a friction clutch whose engagement and disengagement is determined by the manual movement of a clutch pedal, typically controlled by the vehicle driver with his/her foot. Frequent applying the clutch pedal in high density traffic or holding the clutch pedal down during long stops can be fatiguing to the driver WABCO offers an innovative clutch servo portfolio to meet the needs of customers for most of their clutch actuation system applications.

2. Methodology

Modification of brake routing and add on clutch pedal switch in passenger vehicle for assisting in ascent drive is carried out to combine the actuation of clutch and brake into a single operating pedal.

When the vehicle starts climbing the uphill the driver turns on the switch for Hill Assist. After turning on the switch if the driver presses the clutch pedal for gear shifting, simultaneously the brake is also applied. On engaging the clutch, simultaneously oil from the wheel cylinder is released through the DCV releasing the brakes and the vehicle moves forward smoothly. The solenoid will be switched off automatically through

ISBN 978-819704201-0

clutch switch after movement of the vehicle, before the clutch pedal is operated to shift into next gear.

2.1 Challenges

- Hill start control or Hill Ascent/ Descent function is employed in modern vehicles with the help of various sensors / components like ABS, angle sensors, ECU, pressure sensors, torque sensors, wheel speed sensors, brake actuator etc,
- Automatic transmission is having in-built control of Hill hold and Hill decent
- This system can be adapted on any low-end vehicle without adding any costly & sophisticated electronics systems and sensors.
- Hand-braking, one has to simply put the car on neutral and engage the handbrakes. When the slope arrives, gently press the clutch and if the slope is very steep then press the brakes also.
- The present invention relates to an anti-roll back for vehicles having manual transmission for preventing the vehicles from rolling backward inadvertently when starting from stopped condition on an upwardly slanted roadway

2.2 Clutch Booster

The WABCO clutch servo enables the driver to disengage and engage the clutch with minimum clutch pedal effort. It is a pneumatically assisted hydraulic clutch actuating device. It also features mechanical wear indicator which shows the wear of the clutch. WABCO's clutch servo is self-adjusted to accommodate clutch wear and perform even under extreme temperature conditions.

With this development, WABCO offers a technical and cost attractive alternative to the clutch boosters for the truck and bus segments.

- Push rod stand out from mounting face: 115-250 mm
- Servo diameter: 4 inch (102 mm) and 3 inch (76.2 mm)
- Stroke: 75 mm and 85 mm.

Fig.1 Clutch booster

2.2.1 Features

- Mechanical wear indicator which shows the wear of the clutch
- 3/2 directional control valve in 4-inch portfolio which pilots the gear box system at a given stroke of clutch servo push rod

3. Clutch Control

Clutch control refers to the act of controlling the speed of a vehicle with a manual transmission by partially engaging the clutch plate, using the clutch pedal instead of (or in conjunction with) the accelerator pedal. The purpose of a clutch is in part to allow such control; in particular, a clutch provides transfer of torque between shafts spinning at different speeds. In the extreme, clutch control is used in performance driving, such as starting from a dead stop with the engine producing maximum torque at high RPM

ISBN 978-819704201-0

3.1. Clutch Master Cylinder Circuit

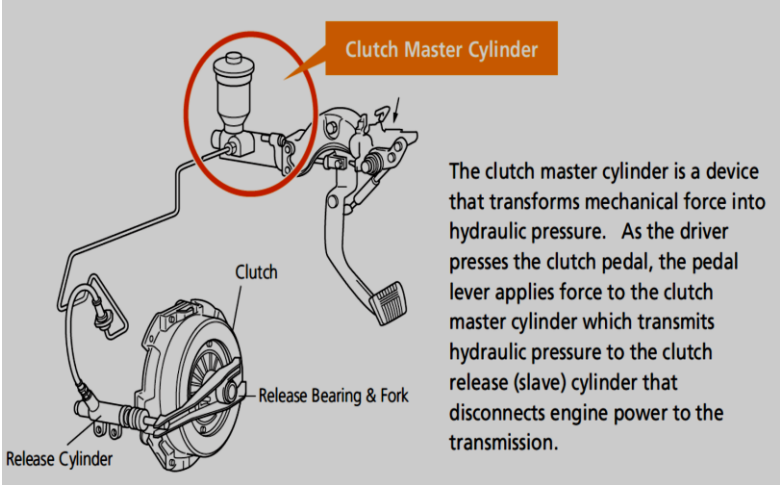

Fig. 2 Clutch Master Cylinder Circuit

3.2. Existing Brake Circuit

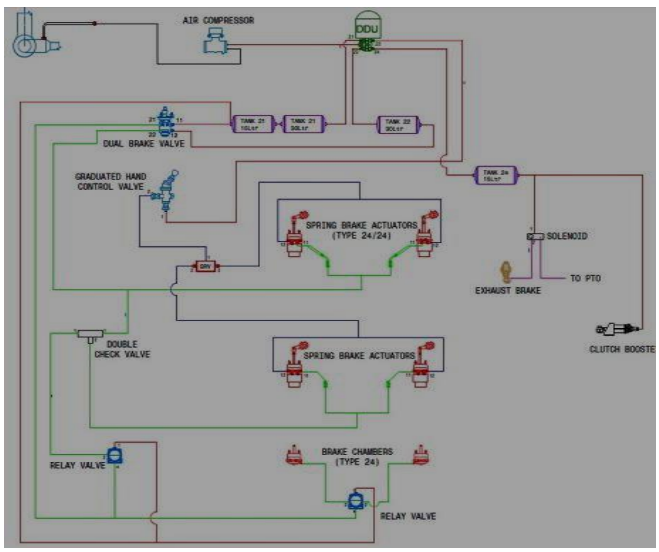

Fig. 3 Existing Brake Circuit

3.3. Modified Clutch Booster

The clutch booster is drilled with a hole of diameter 9mm. This is done to fit the M8/M12 transition adaptor on to the clutch booster. The M8

sized portion of the adaptor is BRAZED in this hole, thus, successfully modifying the clutch booster to serve the purpose of a Hill Assist Device.

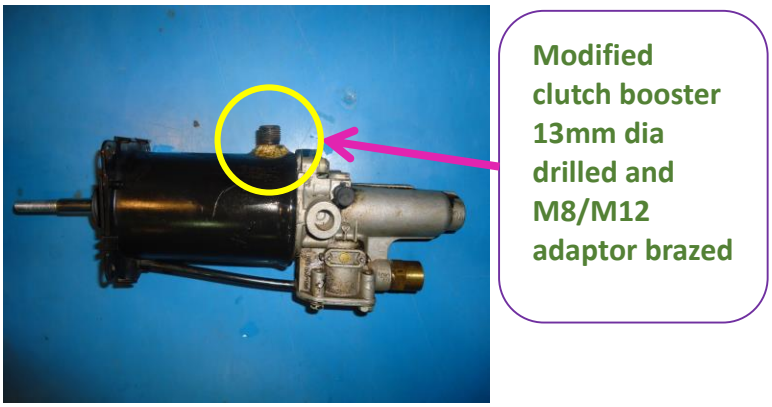

Fig. 4 Modified clutch booster

After the fitment of the adaptor onto the clutch booster, it is fitted onto the gear box that in turn is to be fitted onto the vehicle. In this case, it is a 6 – speed ZF Gear box. The gear box is then coupled with the engine onto the vehicle.

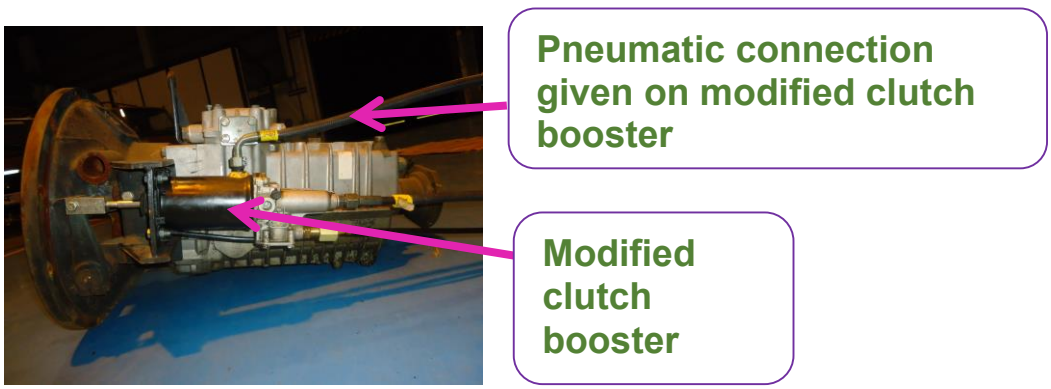

Fig. 5 Modified clutch booster fitted on gear box

3.4. Double Check Valve (DCV)

Notice the double check valve (dc-4) and the double check and brake light switch valve (ds-2). Both of these valve take supply air pressure from two different sources and share their use. If one of the supplies drops pressure, then that supply is isolated from the other supply, and only the

ISBN 978-819704201-0

other supply provides air pressure to the shared port. The brake light switch activates with pressure from either source.

3.5. Function of Double Check Valve

Refer Fig 3.3 for the details of the valve and position of shuttle depending upon the pressure level at the inlet ports. As air pressure enters either end of the double check valve inlet port, the moving shuttle responds to the pressure and a seal opposite port, assuming it is at a lower pressure level than the other. The airflow continues out of the delivery port of the valve. The position of the shuttle will reverse, if the pressure level is reversed

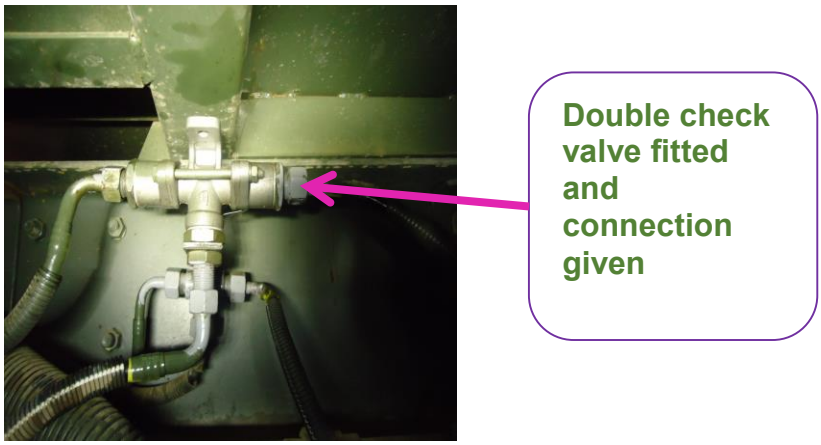

Fig. 6 Double check valve

3.6. Quick Release Valve (QRV)

Quick release valve (qr-1) between the two front brake chambers. This valve is mounted close to the brake chambers and allows rapid exhaust of the brake chambers when the front brake chamber pressure is released. When you let up on the brake pedal, this valve will vent the front brake air chambers to rapidly follow the brake pedal pressure. For partial release of the brake pedal, the quick release valve will rapidly exhaust the pressure down to, but not below, the current brake pedal

pressure. In other words, the front brake chambers will rapidly follow your brake pedal pressures.

3.7. Function of Quick Release Valve

On application of brakes, air delivered from foot brake valve comes to QRV port no 1 and delivered to brake chambers via port no 2. On brake release the air available inside the pipe from foot brake valve to QRV is released through foot brake valve where as the air available in brake chambers is released through QRV. As the QRV is mounted on the axles or near the axle, the quick release of air during brake release helps in avoiding brake dragging.

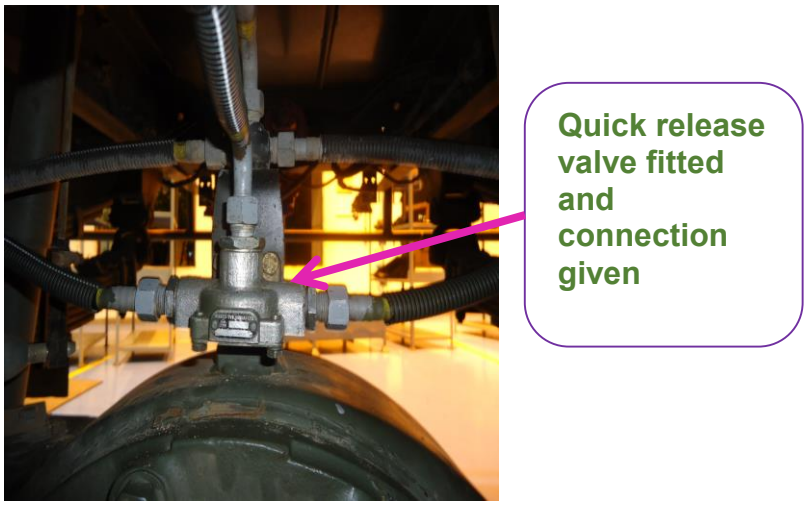

Fig. 7 Quick Release Valve

4. Solenoid Valve

A solenoid valve is an electromechanical device used for controlling liquid or gas flow. The solenoid valve is controlled by electrical current, which is run through a coil. When the coil is energized, a magnetic field is created, causing a plunger inside the coil to move. Depending on the design of the valve, the plunger will either open or close the valve. When electrical current is removed from the coil, the valve will return to its de-energized state.

ISBN 978-819704201-0

In direct-acting solenoid valves, the plunger directly opens and closes an orifice inside the valve. In pilot-operated valves (also called the servo-type), the plunger opens and closes a pilot orifice. The inlet line pressure, which is led through the pilot orifice, opens and closes the valve seal. The most common solenoid valve has two ports: an inlet port and an outlet port. Advanced designs may have three or more ports. Some designs utilize a manifold-type design

4.1. Direct Acting Solenoid Valves

This type of valve is actuated entirely by the solenoid force. The plunger with a seal acting as the main closure device is forced directly onto the valve seat by the fluid pressure and closing spring. The valve is opened directly by the solenoid force only.

4.2. Solenoid Valves without Differential Pressure

The force produced by the solenoid plunger, which is mechanically coupled to the main closure device, opens this type of valve. The sequence starts with the solenoid opening the pilot seat. This 20relieves the pressure on the main closure device, bringing it into balance so the solenoid force can lift it into the open position. When the pilot seat is closed, bleed orifices allow a force to build up on the closure device that pushes it down into the closed position on the valve seat. These valves are preferred for use where the differential pressure is very low or zero.

4.3. Function of Solenoid Valve

Solenoid valve has two main parts: the solenoid and the valve. The solenoid converts electrical energy into mechanical energy which, in turn, opens or closes the valve mechanically. A Direct Acting valve has only a small flow circuit, shown within section E of this diagram (this section is mentioned below as a pilot valve). This Diaphragm Piloted Valve

multiplies this small flow by using it to control the flow through a much larger orifice.

It may use metal seals or rubber seals, and may also have electrical interfaces to allow for easy control. A spring may be used to hold the valve opened or closed while the valve is not activated.

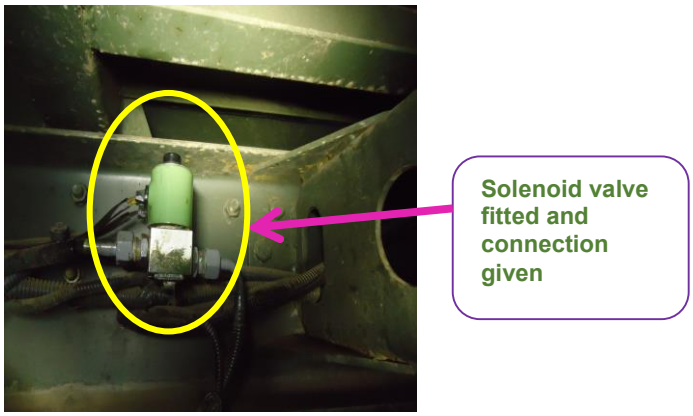

Fig. 8 Double check valve

4.4. Air Piping

The air hose connections are given connecting the Double Check Valve, the Quick Release Valve, the Clutch Booster and the Air Tanks, thus completing the pneumatic circuit of the Hill Assist Device.

Fig. 9 Nylon hoses used for air piping

ISBN 978-819704201-0

5. Experimental Process

5.1. Switch on Dash Board for Actuating the Hill Assist Device

A switch is given on the dash board for the actuation of the hill assist device. When this switch is pushed ON, the electric signal is passed to the Solenoid switch which in turn relays the signal to the DCV.

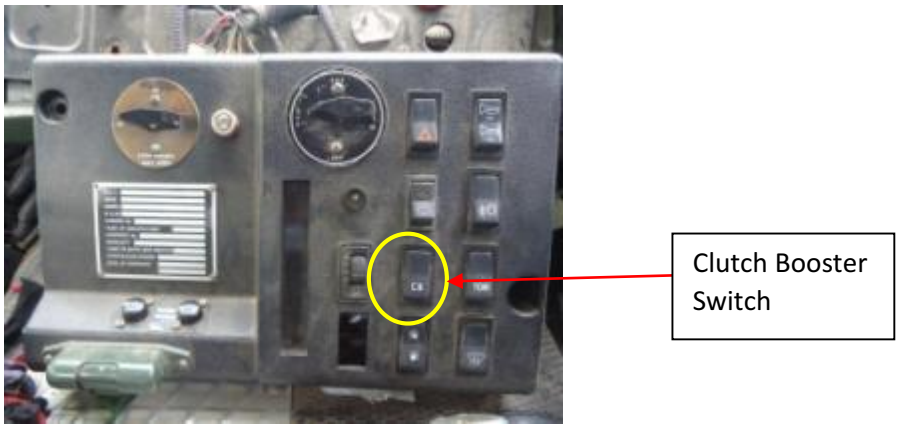

Fig.10 Switch on the Dash board

5.2. Circuit for Hill Assist Device on Scorpio Vehicle

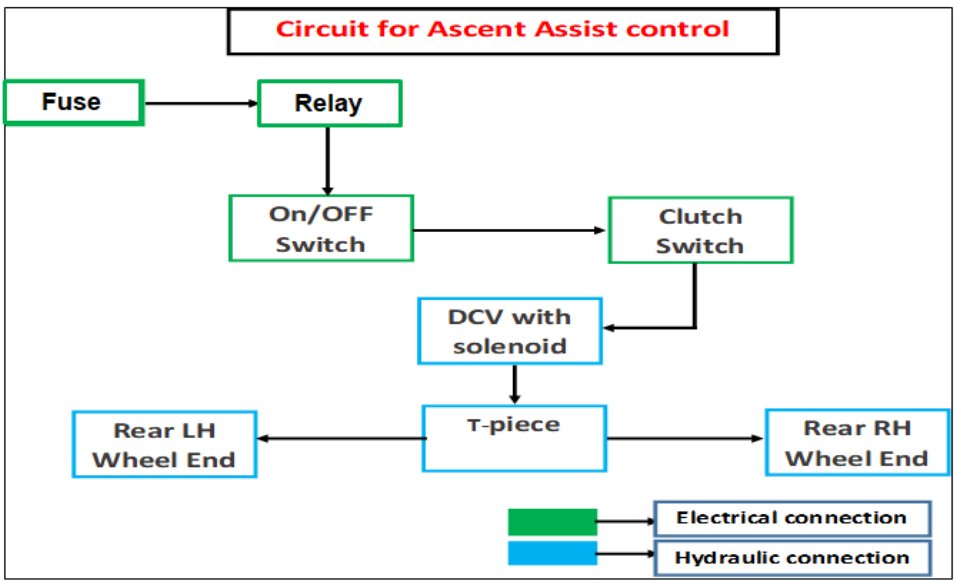

Fig. 11 Hydraulic assist by Electrical Circuit

5.3. DCV Vale Mounted on Rear Axle

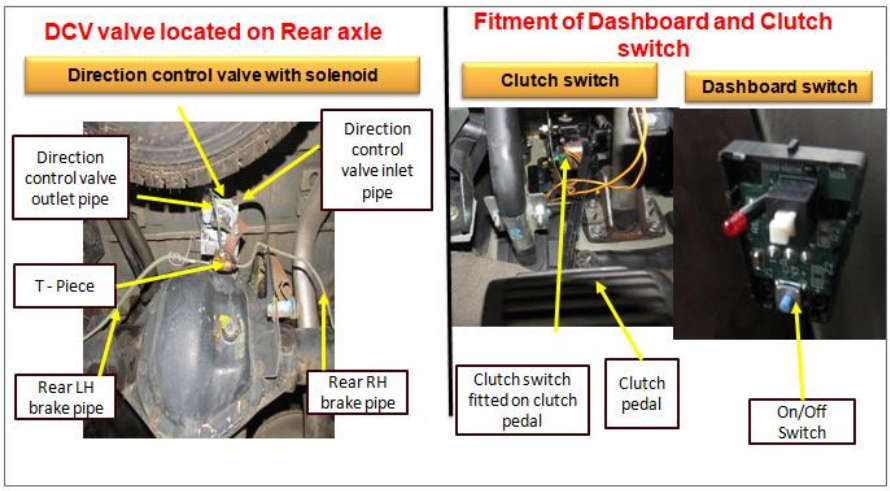

Fig. 12 DCV Vale Mounted on Rear Axle

6. Results and Discussion

With the implementation of the Hill Assist device with a 9 mm adapter from 12mm adapters in the previous test version, a gradability of 25 degree has been made possible in the vehicle. The step by step testing of the vehicle in various degrees of slopes was carried out, supported by the videographed evidence.

- 10.7 degree gradient
- 12.5 degree
- 15 degree
- 25 degree

ISBN 978-819704201-0

Fig.6.1 Test Reference photograph

7. Conclusion

The vehicle has tested at 10° and 15° gradient and hilly area after adoption of Ascent assist device

- No roll back and wheel spinning
- Reduced heating of brake drum
- Decreased tyre wear and tear
- Concept is long term solution.
- Less maintenance cost

References

[1] Allpar.com. "Chrysler Technological Gadgetry, 2009." (Nov. 24, 2009) http://www.allpar.com/corporate/tech-2009.html

[2] Bosch. "Hill Hold Control." (Nov. 24, 2009) http://www.bosch-escential.com/us/language1/hill_hold_control.html

[3] FreePatentsOnline.com. "US Patent 4915131 -- Hill Holder." April 10, 1990. (Nov. 24, 2009) http://www.freepatentsonline.com/4915131.html

[4] Lexus. "GX Performance: Hill-Start Assist Control." (No v. 24, 2009) http://www.lexus.com/models/GX/features/performance/hillstart_assist_control.html

[5] PatentStorm. "US Patent 4247154 - Brake control valve." Jan. 27, 1981. (Nov. 24, 2009) http://www.patentstorm.us/patents/4247154/fulltext.html

[6] PatentStorm. "US Patent 4660691 - Vehicular hill holder system having a control circuit responsive to vehicular attitude, clutch position, and gear position." April 28, 1987. (Nov. 24, 2009) http://www.patentstorm.us/patents/4660691/fulltext.html

[7] PatentStorm. "US Patent 4676354 - Motor, brake and bearing controlled hill holder." June 30,1987. (Nov. 24, 2009) http://www.patentstorm.us/patents/4676354/description.html

[8] PatentStorm. "US Patent 5452946 - Hill holding brake control system." Sept. 26, 1995. (Nov. 24, 2009) http://www.patentstorm.us/patents/5452946/description.html

[9] PatentStorm. "US Patent 5820515 - Hill holding brake pressure as a function of hill gradient detected as a function of acceleration in a control system for automatic transmission." Oct. 13, 1998. (Nov. 24, 2009) http://www.patentstorm.us/patents/5820515/fulltext.html

[10] PatentStorm. "US Patent 6009984 - Method and apparatus for controlling the brake system of a vehicle." Jan. 4, 2000. (Nov. 24, 2009) http://www.patentstorm.us/patents/6009984/fulltext.html

[11] PatentStorm. "US Patent 7226389 - Method and device for hill start." June 5, 2007. (Nov. 24, 2009) http://www.patentstorm.us/patents/7226389/description.html

[12] Subaru of America. "Ask Technical: Subaru Hill-Holder." (Nov. 24, 2009) http://www.drive.subaru.com/Spr03_HillHolder.htm

[13] Toyota. "Hybrid Synergy Drive: Hill Start Control." (Nov 24, 2009) http://www.hybridsynergydrive.com/en/hillstart_control.html

ISBN 978-819704201-0